Oxygen Transmitter

AVC-010 series

Features

The oxygen level is a very important indication of indoor air quality. It exists generally, in gaseous state at room temperature. When people stays in some places with low oxygen level, such as office, commercial building or basement, it might cause hypoxemia. Chronic fatigue is a major sign that people isn't getting enough oxygen. Without enough oxygen in the lungs, the organs cannot function properly. As a result, toxins accumulate in the blood stream.

AVC-010 Oxygen transmitter can monitor oxygen level and send the data to monitoring center for analysis or for ventilation control. Air quality can be, therefore, efficiently monitored and managed. Easy installation and the recommended height of installation is 1~2M above the floor level. It is perfect for household application, offices, indoor parking, library, hospital, shopping mall and etc.

Dimensions

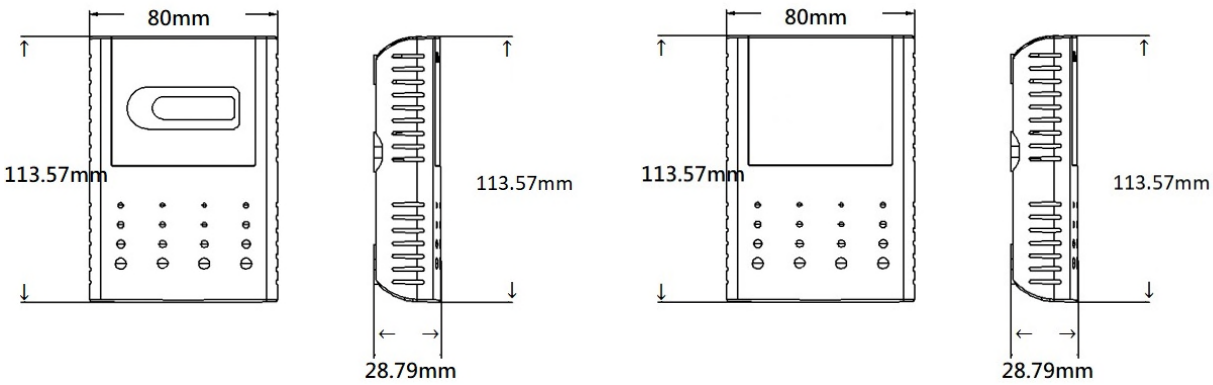

V.E.20220728

DISTRIBUTOR IN VIETNAM: BACH KHOA EQUIPMENT INTERNATIONAL JSC.
Tel: +84 988 380 368 www.bkic.vn

Specifications

Model	AVC-010
Measurement principle	Electrochemical
Measurement range	0 ~ 30%
Coverage area	80m³(1)
Accuracy (at 25℃)	Full scale ± 5%
Resolution	0.01%
Repeatability	Reading ± 5%
Response time	τ90 ≦15 sec
Drift	<2% /month(2)
Power consumption	RS485: 0.2W (Max.); 4~20mA/2~10V,RS485: 0.4W (Max.); LoRa / RS485: 1.2W (Max.)
Warm-up time	1 minute
Power supply	DC 12 ~36V, AC 24V (50/60Hz)
Signal output	DC 4~20mA/2~10V; RS485 (Modbus RTU)/ LoRa (Peer to peer) radio frequency: 862~932 MHz(3)
Linearity error	Reading ± 8% (at -10℃~ 50℃)
Calibration interval (recommended)	6 months(4) (typical)
Sensor lifespan	1 year (5)
Pressure range	1 atm ± 10 %
Storage temp.	-10~+50℃(14~122℉)
Environmental	-10~+50℃(14~122℉); 0~95%RH (non-condensing)
IP rating	IP30 (No protection from liquids)
Case material	Fireproof ABS
Certifications	CE and FCC

Note:

(1) The coverage area should be considered individually to account for the particular layout and any varying or enclosed spaces. It is recommended to install at least one device in each room.
(2) The sensor drift will very much depend on environmental condition.
(3) The frequency channels will be differed by country and this frequency can be configured accordingly from 862 to 932Hz.
(4) It is recommended to perform calibration at least every 6 months. Meanwhile, for the device installed in the environment with extreme condition, quarterly calibration would be necessary.
(5) The lifespan of sensor might vary depending on environmental conditions. For example, high ambient temperature will shorten its lifespan and will cause sensor drift.

Ordering information

AVC-010□□□-M

Code 1	Installation
W	Wall-mount

Code 2	Output
4	RS-485
6	RS-485/LoRa
8	RS-485, 4-20mA/2-10V

Code 3	Display
X	No
D	Yes

V.E.20220728

** All information is subject to change without prior notice.

DISTRIBUTOR IN VIETNAM: BACH KHOA EQUIPMENT INTERNATIONAL JSC.
Tel: +84 988 380 368 www.bkic.vn